INSTRUCTION & SAFETY MANUAL

SIL 2 Temperature Signal Converter
Multifunction, DIN-Rail and Termination Board,
Models D5072S, D5072D

GM INTERNATIONAL
TECHNOLOGY FOR SAFETY

Characteristics

General Description: The single and dual channel Temperature Signal Converter D5072S and D5072D accepts a low level dc signal from millivolt, thermocouple or 2-3-4 wire resistance/RTD or transmitting potentiometer sensor, located in Hazardous Area, and converts, with isolation, the signal to drive a Safe Area load, suitable for applications requiring SIL 2 level (according to IEC 61511) in safety related systems for high risk industries. Output signal can be direct or reverse. Cold junction compensation can be programmed as: Automatic: provided by an internal temperature sensor; Fixed: to a user-customizable temperature value;Remote: (only D5072D) connecting compensation RTD to one of the two ch.For D5072D module: duplicator function provides two independent outputs from one single input. Adder, subtractor, low/high selector functions provide two independent outputs representing input A, input B, input A plus input B, input A minus input B, low/high selector.Modules are provided with alarm function which is available via photoMOS output, Termination Board and Power Bus. Mounting on standard DIN-Rail, with or without Power Bus, or on customizedTermination Boards, in Safe Area or in Zone 2.

Technical Data

Supply: 24 Vdc nom (18 to 30 Vdc) reverse polarity protected, ripple within voltage limits ≤ 5 Vpp, 2 A time lag fuse internally protected.
Current consumption @ 24 V: 55 mA (D5072D), 45 mA (D5072S) with 20 mA out typical.
Power dissipation: 1.15 W for 2 channels D5072D, 1.0 W for 1 channel D5072S with 24 V supply voltage and 20 mA output typical.
Isolation (Test Voltage): I.S. In/Out 2.5 KV; I.S. In/Supply 2.5 KV; I.S. In/I.S. In 500 V; Out/Supply 500 V; Out/Out 500 V.
Input: (for details see Input specifications table on page 8) millivolt or thermocouple type A1, A2, A3, B, E, J, K, L, LR, N, R, S, T, U, or 2-3-4 wire RTD Pt50, Pt100, Pt200, Pt300, Pt400, Pt500, Pt1000 to IEC, Pt100 to ANSI, Ni100, Ni120 to DIN43760, Pt46, Pt50, Pt100, Pt200, Pt300, Pt400, Pt500, Cu50, Cu53, Cu100 to GOST6651 (russian standard) and Cu9.035 (or Cu10), or 3 wire transmitting potentiometer (100 Ω to 10 kΩ). 4-wire RTD input only on D5072S. Possibility of configuring user customized sensor (TC or RTD).
Choice between °C/°F.
Integration time: from 50 ms to 500 ms depending on sensor and fast/slow integration.
Resolution: 1 µV on mV/TC, 1 mΩ on RTD/resistance, 0.0001 % on transmitting potentiometer.
Visualization: 0.1 °C on temp.,10 µV on mV, 100 mΩ on resistance, 0.1 % on potentiometer.
Input range: within sensor limits (-50 to +80 mV for TC/mV, 0-4 kΩ for resistance).
Measuring RTD current: ≤ 0.15 mA.
2 wire RTD line resistance compensation: ≤ 100 Ω (programmable).
Thermocouple Reference Junction Compensation: programmable as automatic with internal compensator, fixed (– 60 to + 100 °C), or remote using 1 channel (D5072D).
Thermocouple burnout current: ≤ 50 µA.
Fault: enabled or disabled. Analog output can be programmed to reflect fault conditions via downscale, highscale or customized value forcing. Fault conditions are also signaled via BUS and by red LED on front panel for each channel. Fault conditions are: Sensor burnout, Sensor out of range, Output saturation, Internal fault, Module out of temperature range.
Output: Fully customizable 0/4 to 20 mA, on max. 300 Ω load source mode, current limited at 24 mA. In sink mode, external voltage generator range is V min. 3.5V at 0Ω load and V max. 30V. If generator voltage Vg > 10 V, a series resistance ≥ (Vg - 10)/0.024 Ω is needed. The maximum value of series resistance is (Vg - 3.5)/0.024 Ω.
Resolution: 1 µA current output.
Transfer characteristic: linear, direct or reverse on all input sensors.
Response time: ≤ 20 ms (10 to 90 % step).
Output ripple: ≤ 20 mVrms on 250 Ω load.
Modbus Output: Modbus RTU protocol up to 115.200 baud on Bus connector.
Alarm: ***Trip point range:*** within rated limits of input sensor (see input step resolution).
ON-OFF delay time: 0 to 1000 s, 100 ms step.
Hysteresis: 0 to 500 °C for TC/RTD sensor input, 0 to 50 mV for mV input, 0 to 50 % for potentiometer input, 0 to 2 KΩ for resistance (see input for step resolution).
Output: voltage free SPST photoMOS: 100 mA, 60 Vdc (≤ 1 V voltage drop).
Performance: Ref. Conditions 24 V supply, 250 Ω load, 23 ± 1 °C ambient temperature, slow integration mode, 4-wires configuration for RTD.
Input: Calibration and linearity accuracy: see section "Input Specifications".
Temperature influence: ≤ ± 2 µV on mV or thermocouple,
± 20 mΩ on RTD (≤ 300 Ω @ 0°C) or ± 200 mΩ on RTD (> 300 Ω @ 0°C),
± 0.02 % on potentiometer for a 1 °C change.
Ref. Junction Compensation influence: ≤ ± 1 °C (thermocouple sensor).
Analog Output: Calibration accuracy: ≤ ± 0.05 % of full scale.
Linearity error: ≤ ± 0.05 % of full scale.
Supply voltage influence: ≤ ± 0.02 % of full scale for a min to max supply change.
Load influence: ≤ ± 0.02 % of full scale for a 0 to 100 % load resistance change.
Temperature influence: ≤ ± 0.01 % on zero and span for a 1 °C change.
Compatibility:
CE mark compliant, conforms to Directive: 2014/34/EU ATEX, 2014/30/EU EMC, 2014/35/EU LVD, 2011/65/EU RoHS.
Environmental conditions:
Operating: temperature limits – 40 to + 70 °C, relative humidity 95 %, up to 55 °C.
Storage: temperature limits – 45 to + 80 °C.
Safety Description:
ATEX: II 3(1)G Ex nA [ia Ga] IIC T4 Gc, II (1)D [Ex ia Da] IIIC, I (M1) [Ex ia Ma] I
IECEx / INMETRO / NEPSI: Ex nA [ia Ga] IIC T4 Gc, [Ex ia Da] IIIC, [Ex ia Ma] I,
FM: NI-AIS / I / 2 / ABCD / T4, AIS / I,II,III / 1 / ABCDEFG, I / 2 / AEx nA [ia] / IIC / T4
FMC: NI-AIS / I / 2 / ABCD / T4, AIS / I,II,III / 1 / ABCDEFG, I / 2 / Ex nA [ia] / IIC / T4
EAC-EX: 2Ex nA [ia Ga] IIC T4 Gc X, [Ex ia Da] IIIC, [Ex ia Ma] I.
UKR TR n. 898: 2ExnAiaIICT4 X, Exial X
associated apparatus and non-sparking electrical equipment.
D5072S:Uo/Voc = 7.2 V, Io/Isc = 23 mA, Po/Po = 40 mW ,
Ui/Vmax = 12.8 V, Ii/Imax = 28.7 mA, Ci = 0 nF, Li = 0 nH at terminals 7-8-9-10.
D5072D: Uo/Voc = 7.2 V, Io/Isc = 16 mA, Po/Po = 27 mW ,
Ui/Vmax = 12.8 V, Ci = 0 nF, Li = 0 nH at terminals 7-8-9, 10-11-12.
Um = 250 Vrms, -40 °C ≤ Ta ≤ 70 °C.
Approvals:
BVS 12 ATEX E 053 X conforms to EN60079-0, EN60079-11, EN60079-15.
IECEx BVS 12.0050X conforms to IEC60079-0, IEC60079-11, IEC60079-15.
INMETRO DNV 13.0110 X conforms to ABNT NBR IEC60079-0, ABNT NBR IEC60079-11, ABNT NBR IEC60079-15, ABNT NBR IEC60079-26.
FM 3046304 and FMC 3046304C conforms to Class 3600, 3610, 3611, 3810,
ANSI/ISA-60079-0, ANSI/ISA-60079-11, ANSI/ISA-60079-15, C22.2 No.142, C22.2 No.157, C22.2 No.213, C22.2 No. 60079-0, C22.2 No. 60079-11, C22.2 No. 60079-15.
C-IT.MH62.B.04182 conforms to GOST R IEC 60079-0,GOST R IEC 60079-11, GOST R IEC 60079-15.
СЦ 16.0036 X conforms to ДСТУ 7113, ГОСТ 22782.5-78, ДСТУ IEC 60079-15.
GYJ14.1406X conforms to GB3836.1, GB3836.4; GB3836.8, GB3836.20.
TC21131 for TIIS approval (only for D5072D).
TUV Certificate No. C-IS-236198-02, SIL 2 according to IEC 61511.
DNV Type Approval Certificate No.A-13625 and KR No.MIL20769-EL002 Certificates for maritime applications.
Mounting: T35 DIN-Rail according to EN50022, with or without Power Bus or on customized Termination Board.
Weight: about 135 g D5072D, 130 g D5072S.
Connection: by polarized plug-in disconnect screw terminal blocks to accomodate terminations up to 2.5 mm^2.
Location: installation in Safe Area/Non Hazardous Locations or Zone 2, Group IIC T4 or Class I, Division 2, Group A,B,C,D, T4 or Class I, Zone 2, Group IIC, T4.
Protection class: IP 20.
Dimensions: Width 12.5 mm, Depth 123 mm, Height 120 mm.

Programming

The module is fully programmable. Operating parameters can be changed from PC via PPC5092 adapter connected to USB serial line and SWC5090 software.
Measured values and diagnostic alarms can be read on both serial configuration or Modbus output line.
SWC5090 software also allows the Monitoring and Recording of values. For details please see SWC5090 manual ISM0154.

Ordering Information

Model:	D5072	
1 channel		S
2 channels		D

Power Bus and DIN-Rail accessories:

Connector JDFT049	Cover and fix MCHP196
Terminal block male MOR017	Terminal block female MOR022

Front Panel and Features

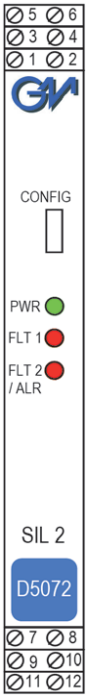

- D5072 SIL 2 according to IEC61511 for Tproof=3/10yrs (≤10% / >10 % of total SIF), SFF 79.88%, PFDavg (1 year) 3.16 E-04, with analog current output.
- Input from Zone 0 (Zone 20), installation in Zone 2.
- mV, thermocouple, 2 or 3 or 4 wire resistance/RTD or transmitting potentiometer Input Signal.
- 2-wire RTD line resistance compensation.
- Internal Reference Junction Compensation automatic or fixed (programmable value).
- Fastest integration time: 50 ms
- Fully customizable Output range from 0 to 24 mA Output Signal linear or reverse (typical 0/4-20 mA).
- Output duplication possible for D5072D.
- Modbus RTU RS-485 Output.
- Independent multiple Fault detection.
- Programmable alarm available on photoMOS output or Termination Board connector.
- High Accuracy, µP controlled A/D converter.
- Three port isolation, Input/Output/Supply.
- EMC Compatibility to EN61000-6-2, EN61000-6-4, EN61326-1, EN61326-3-1 for safety system.
- Fully programmable operating parameters.
- ATEX, IECEx, FM, FMC, INMETRO, EAC-EX, UKR TR n. 898, NEPSI, TIIS, TÜV Certifications.
- Type Approval Certificate DNV and KR for maritime applications.
- High Density, two channels per unit.
- Simplified installation using standard DIN-Rail and plug-in terminal blocks, with or without Power Bus, or customized Termination Boards.
- 250 Vrms (Um) max. voltage allowed to the instruments associated with the barrier.
- Data logging and monitoring via software.

Terminal block connections

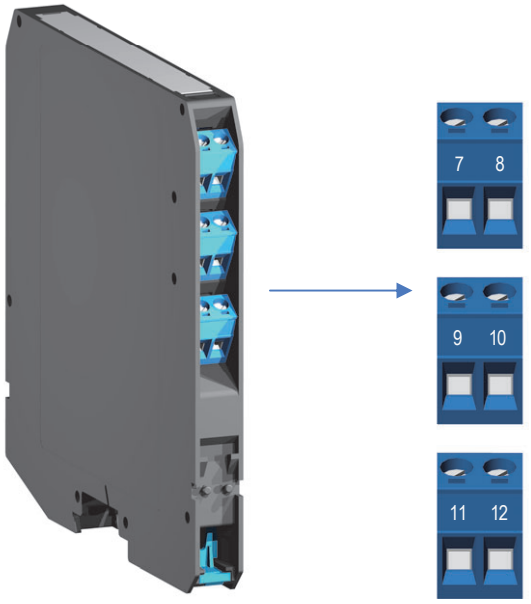

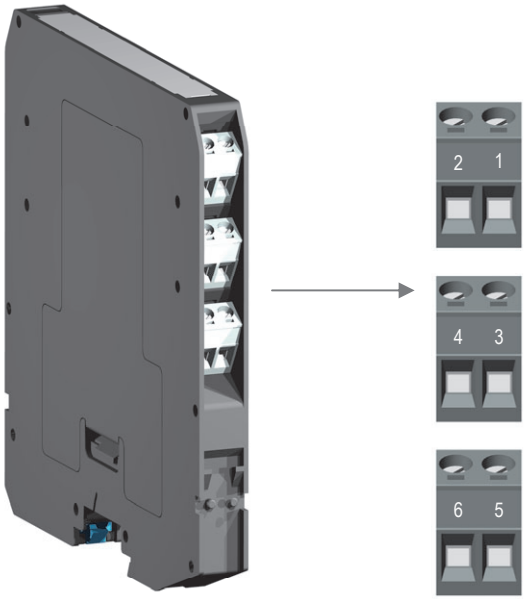

HAZARDOUS AREA

7	D5072S: + Input for thermocouple TC or for 3, 4 wire RTD or potentiometer D5072D: + Input Ch1 for thermocouple TC or for 3 wire RTD or potentiometer
8	D5072S: - Input for thermocouple TC or for 2, 3, 4 wire RTD or potentiometer D5072D: - Input Ch1 for thermocouple TC or for 2, 3 wire RTD or potentiometer
9	D5072S: Input for 2, 3, 4 wire RTD or potentiometer D5072D: Input Ch1 for 2, 3 wire RTD or potentiometer
10	D5072S: Input for 4 wire RTD + Power Supply 24 Vdc D5072D: Input Ch2 for 2, 3 wire RTD or potentiometer
11	D5072D: + Input Ch2 for thermocouple TC or for 3 wire RTD or potentiometer
12	D5072D: - Input Ch2 for thermocouple TC or for 2, 3 wire RTD or potentiometer

SAFE AREA

1	D5072S, D5072D (Ch1): + Output (source current mode) or - Output (sink current mode)
2	D5072S, D5072D (Ch1): - Output (source current mode) or + Output (sink current mode)
3	D5072S (Alarm), D5072D (Ch2 Current/Alarm or Ch1 Duplicator/Alarm): +Output (source current) or - Output (sink current) or +Output (Alarm/Burnout)
4	D5072S (Alarm), D5072D (Ch2 Current/Alarm or Ch1 Duplicator/Alarm): - Output (source current) or +Output (sink current) or - Output (Alarm/Burnout)
5	+ Power Supply 24 Vdc
6	- Power Supply 24 Vdc

Parameters Table

In the system safety analysis, always check the Hazardous Area/Hazardous Locations devices to conform with the related system documentation, if the device is Intrinsically Safe check its suitability for the Hazardous Area/Hazardous Locations and group encountered and that its maximum allowable voltage, current, power (Ui/Vmax, Ii/Imax, Pi/Pi) are not exceeded by the safety parameters (Uo/Voc, Io/Isc, Po/Po) of the D5072 series Associated Apparatus connected to it. Also consider the maximum operating temperature of the field device, check that added connecting cable and field device capacitance and inductance do not exceed the limits (Co/Ca, Lo/La, Lo/Ro) given in the Associated Apparatus parameters for the effective group. See parameters indicated in the table below:

	D5072 Terminals		D5072 Associated Apparatus Parameters	Must be	Hazardous Area/ Hazardous Locations Device Parameters
D5072S	Ch1	7 - 8 - 9 - 10	Uo / Voc = 7.2 V	≤	Ui / Vmax
D5072D	Ch1	7 - 8 - 9			
	Ch2	10 - 11 - 12			
D5072S	Ch1	7 - 8 - 9 - 10	Io / Isc = 23 mA	≤	Ii/ Imax
D5072D	Ch1	7 - 8 - 9	Io / Isc = 16 mA		
	Ch2	10 - 11 - 12			
D5072S	Ch1	7 - 8 - 9 - 10	Po / Po = 40 mW	≤	Pi / Pi
D5072D	Ch1	7 - 8 - 9	Po / Po = 27 mW		
	Ch2	10 - 11 - 12			

	D5072 Terminals		D5072 Associated Apparatus Parameters Cenelec (US)		Must be	Hazardous Area/ Hazardous Locations Device + Cable Parameters
D5072S	Ch1	7 - 8 - 9 - 10	Co / Ca = 13.5 µF	IIC (A, B)	≥	Ci / Ci device + C cable
			Co / Ca = 240 µF	IIB (C)		
			Co / Ca = 1000 µF	IIA (D)		
			Co / Ca = 1000 µF	I		
			Co / Ca = 240 µF	IIIC (E, F, G)		
D5072D	Ch1	7 - 8 - 9	Co / Ca = 13.5 µF	IIC (A, B)		
			Co / Ca = 240 µF	IIB (C)		
			Co / Ca = 1000 µF	IIA (D)		
	Ch2	10 - 11 - 12	Co / Ca = 1000 µF	I		
			Co / Ca = 240 µF	IIIC (E, F, G)		
D5072S	Ch1	7 - 8 - 9 - 10	Lo / La = 67 mH	IIC (A, B)	≥	Li / Li device + L cable
			Lo / La = 268 mH	IIB (C)		
			Lo / La = 537 mH	IIA (D)		
			Lo / La = 882 mH	I		
			Lo / La = 268 mH	IIIC (E, F, G)		
D5072D	Ch1	7 - 8 - 9	Lo / La = 138 mH	IIC (A, B)		
			Lo / La = 555 mH	IIB (C)		
			Lo / La = 1111 mH	IIA (D)		
	Ch2	10 - 11 - 12	Lo / La = 1822 mH	I		
			Lo / La = 555 mH	IIIC (E, F, G)		
D5072S	Ch1	7 - 8 - 9 - 10	Lo / Ro = 875 µH/Ω	IIC (A, B)	≥	Li / Ri device and L cable / R cable
			Lo / Ro = 3500 µH/Ω	IIB (C)		
			Lo / Ro = 7000 µH/Ω	IIA (D)		
			Lo / Ro = 11480 µH/Ω	I		
			Lo / Ro = 3500 µH/Ω	IIIC (E, F, G)		
D5072D	Ch1	7 - 8 - 9	Lo / Ro = 1290 µH/Ω	IIC (A, B)		
			Lo / Ro = 5160 µH/Ω	IIB (C)		
			Lo / Ro = 10330 µH/Ω	IIA (D)		
	Ch2	10 - 11 - 12	Lo / Ro = 16950 µH/Ω	I		
			Lo / Ro = 5160 µH/Ω	IIIC (E, F, G)		

When used with separately powered intrinsically safe devices, check that maximum allowable voltage, current (Ui/Vmax, Ii/Imax) of the D5072 Associated Apparatus are not exceeded by the safety parameters (Uo/Voc, Io/Isc) of the Intrinsically Safe device, indicated in the table below:

	D5072 Terminals		D5072 Associated Apparatus Parameters	Must be	Hazardous Area/ Hazardous Locations Device Parameters
D5072S	Ch1	7 - 8 - 9 - 10	Ui / Vmax = 12.8 V	≥	Uo / Voc
D5072D	Ch1	7 - 8 - 9			
	Ch2	10 - 11 - 12			
D5072S	Ch1	7 - 8 - 9 - 10	Ii / Imax = 28.7 mA	≥	Io / Isc
D5072S	Ch1	7 - 8 - 9 - 10	Ci = 0 nF, Li= 0 nH		
D5072D	Ch1	7 - 8 - 9			
	Ch2	10 - 11 - 12			

For installations in which both the Ci and Li of the Intrinsically Safe apparatus exceed 1 % of the Co and Lo parameters of the Associated Apparatus (excluding the cable), then 50 % of Co and Lo parameters are applicable and shall not be exceeded (50 % of the Co and Lo become the limits which must include the cable such that Ci device + C cable ≤ 50 % of Co and Li device + L cable ≤ 50 % of Lo).
If the cable parameters are unknown, the following value may be used: Capacitance 180pF per meter (60pF per foot), Inductance 0.60µH per meter (0.20µH per foot).

Function Diagram

HAZARDOUS AREA ZONE 0 (ZONE 20) GROUP IIC, HAZARDOUS LOCATIONS CLASS I, DIVISION 1, GROUPS A, B, C, D, CLASS II, DIVISION 1, GROUPS E, F, G, CLASS III, DIVISION 1, CLASS I, ZONE 0, GROUP IIC

SAFE AREA, ZONE 2 GROUP IIC T4, NON HAZARDOUS LOCATIONS, CLASS I, DIVISION 2, GROUPS A, B, C, D T-Code T4, CLASS I, ZONE 2, GROUP IIC T4

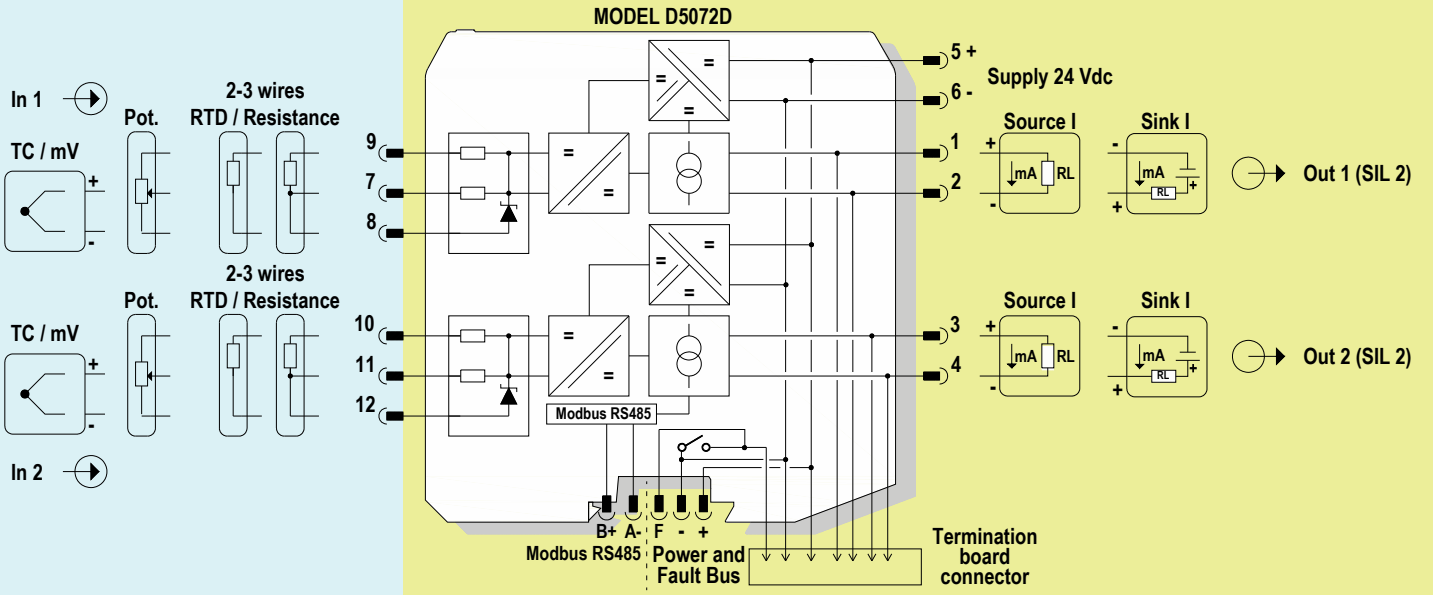

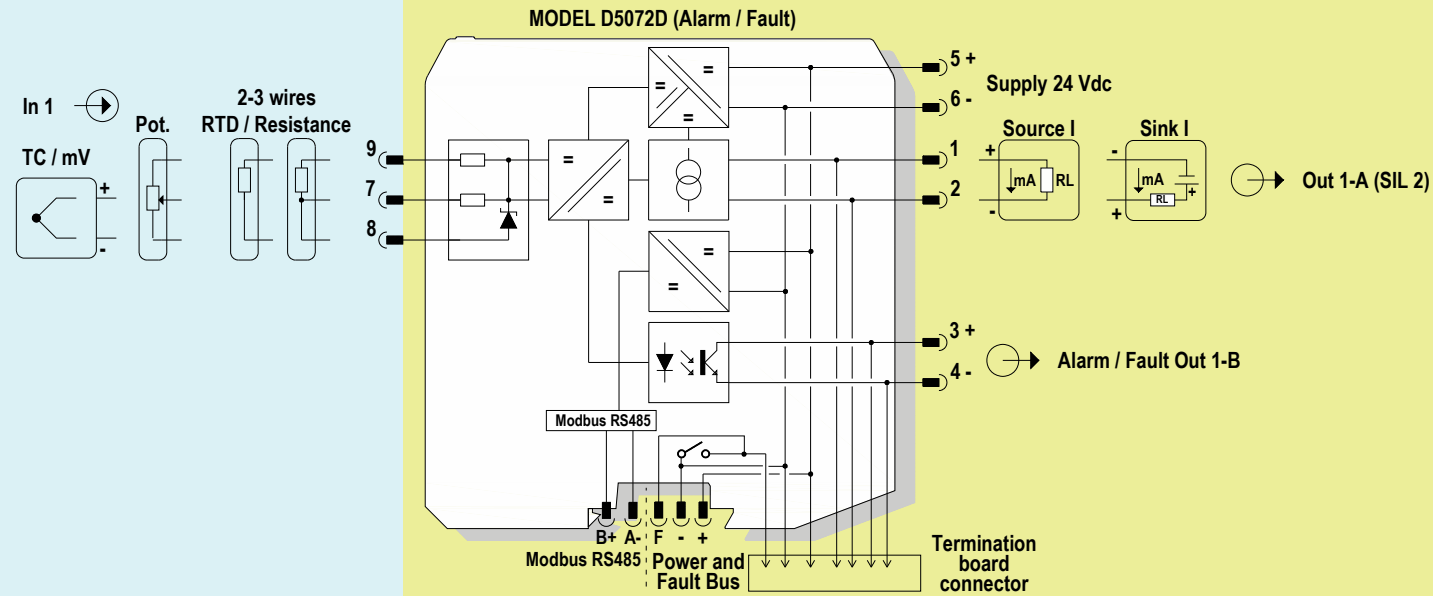

Function Diagram

HAZARDOUS AREA ZONE 0 (ZONE 20) GROUP IIC,
HAZARDOUS LOCATIONS CLASS I, DIVISION 1, GROUPS A, B, C, D,
CLASS II, DIVISION 1, GROUPS E, F, G, CLASS III, DIVISION 1,
CLASS I, ZONE 0, GROUP IIC

SAFE AREA, ZONE 2 GROUP IIC T4,
NON HAZARDOUS LOCATIONS, CLASS I, DIVISION 2,
GROUPS A, B, C, D T-Code T4, CLASS I, ZONE 2, GROUP IIC T4

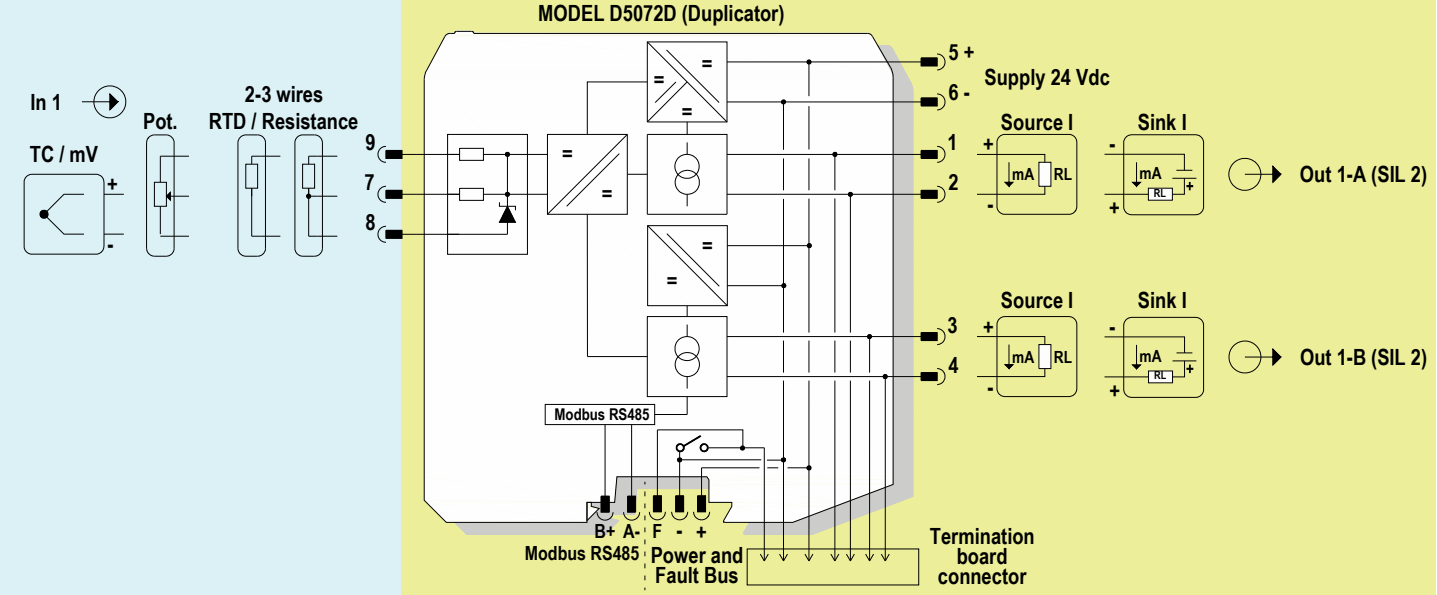

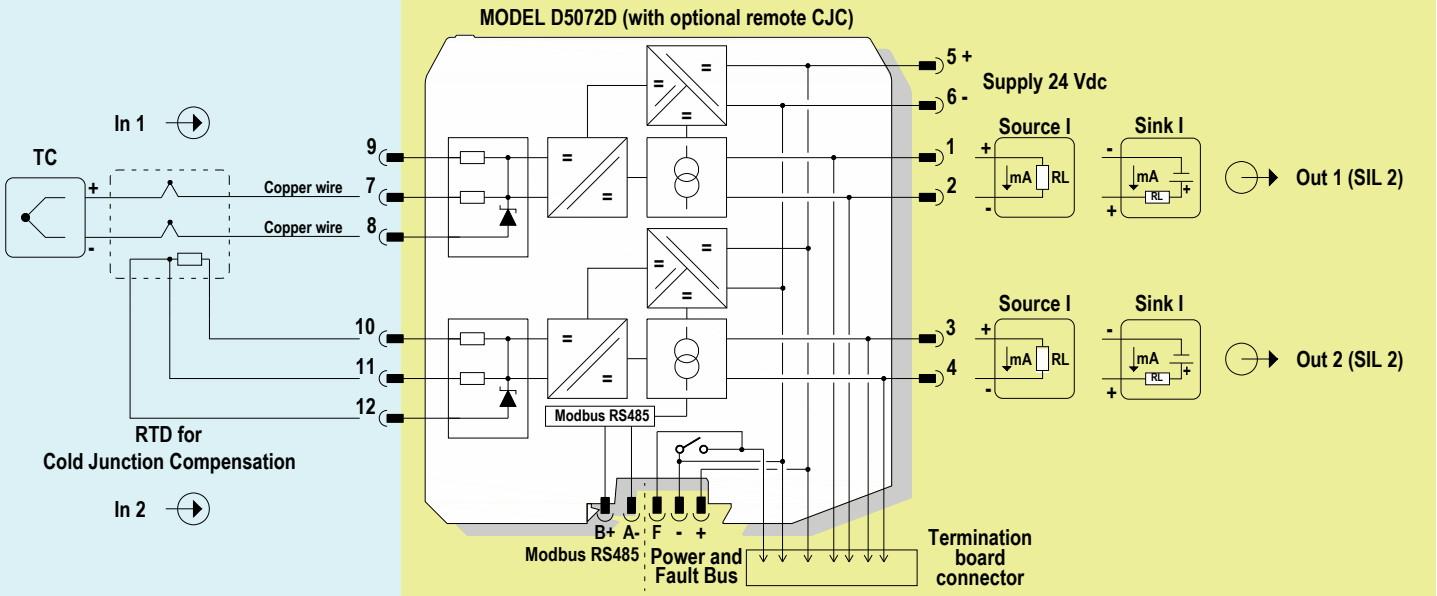

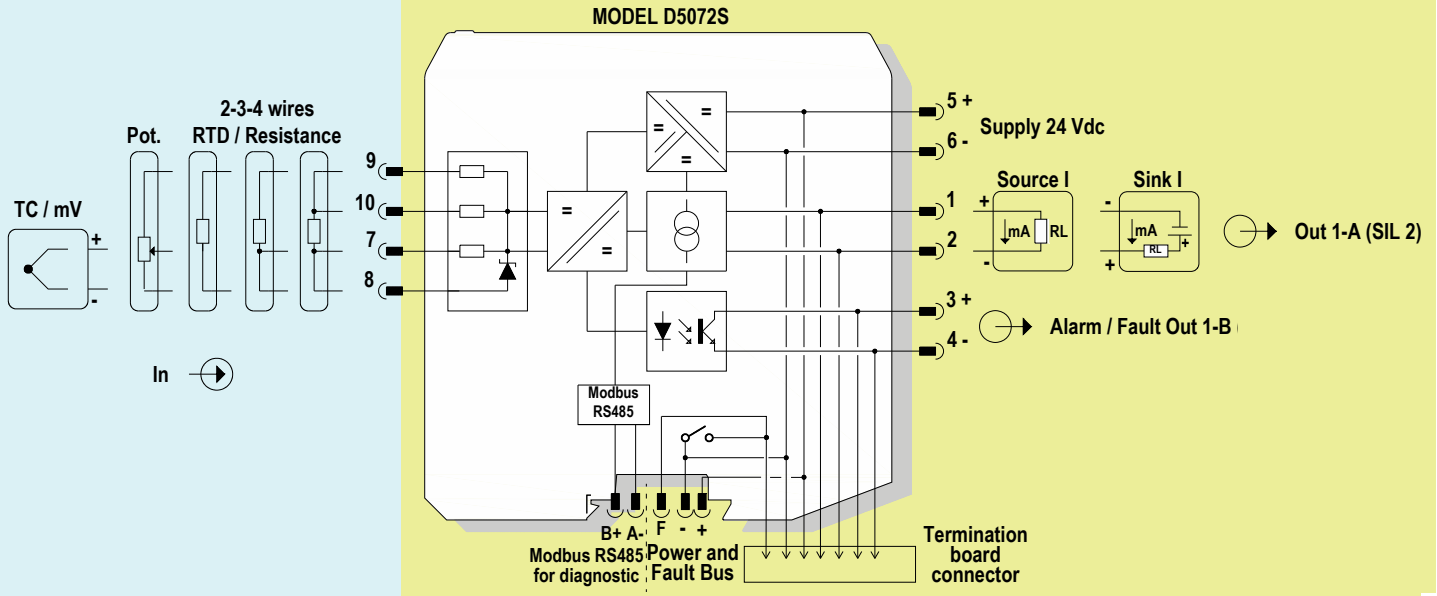

Application for D5072S , with 4-20 mA Current Output

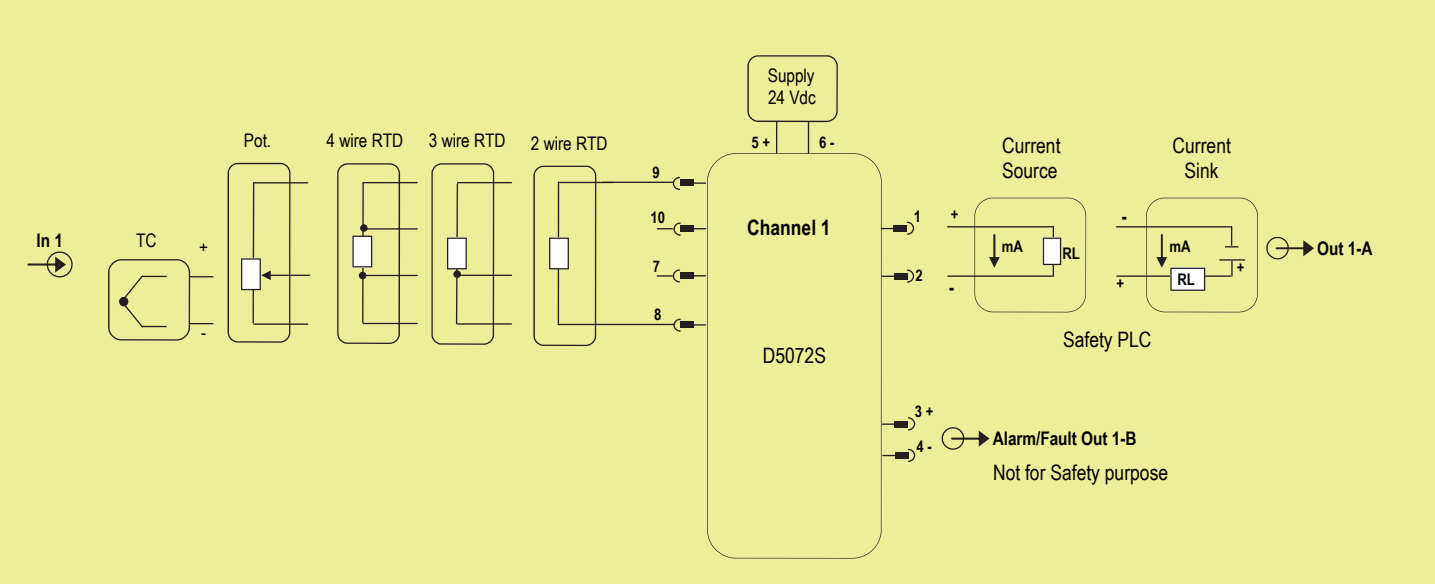

Description:

For this application, enable 4 - 20 mA Source or Sink mode (see page 11 for more information).
The module is powered by connecting 24 Vdc power supply to Pins 5 (+ positive) and 6 (- negative). The green LED is lit in presence of supply power.
Input sensor (Thermocouple, RTD, Potentiometer) is applied from Pins 7 to 10 (see page 11 for more information about input settings).
Source or Sink output current is applied to Pins 1-2. Alarm/Fault Output is only used for service purpose (not for Safety purpose) and is applied to Pins 3-4

Safety Function and Failure behavior:

D5072S is considered to be operating in Low Demand mode, as a Type B module, having Hardware Fault Tolerance (HFT) = 0.
The failure behaviour of D5072S module (only the 4 - 20 mA current output configuration is used for safety applications) is described from the following definitions :

- □ Fail-Safe State: is defined as the output going to Fail Low or Fail High, considering that the Safety logic solver can convert the Low and High failures (dangerous detected failures) to the Fail-Safe state.
- □ Fail Safe: failure mode that causes the module / (sub)system to go to the defined Fail-Safe state without a demand from the process .
- □ Fail Dangerous: failure mode that does not respond to a demand from the process (i.e. being unable to go to the defined Fail-Safe state) or deviates the output current by more than 3% of the correct value.
- □ Fail High: failure mode that causes the output signal to go above the maximum output current (> 20 mA). This limit value can be programmed by the user, but in this analysis it is set to 20 mA. Assuming that the application program in the Safety logic solver is configured to detect High failures and does not automatically trip on these failures, they have been classified as Dangerous Detected (DD) failures.
- □ Fail Low: failure mode that causes the output signal to go below the minimum output current (< 4 mA). This limit value can be programmed by the user, but in this analysis it is set to 4 mA. Assuming that the application program in the Safety logic solver is configured to detect Low failures and does not automatically trip on these failures, they have been classified as Dangerous Detected (DD) failures.
- □ Fail "No Effect": failure mode of a component that plays a part in implementing the Safety Function but that is neither a safe failure nor a dangerous failure. When calculating the SFF, this failure mode is not taken into account.
- □ Fail "Not part": failure mode of a component which is not part of the Safety Function but is part of the circuit diagram and is listed for completeness. When calculating the SFF this failure mode is not taken into account.

As the module is supposed to be proven-in-use device, therefore according to the requirements of IEC 61511-1 section 11.4.4, a HFT = 0 is sufficient for SIL 2 (sub-) systems including Type B components and having a SFF equal or more than 60%.
Failure rate data: taken from Siemens Standard SN29500.

Failure rate table:

Failure category	Failure rates (FIT)
λ_{dd} = Total Dangerous Detected failures	240.26
λ_{du} = Total Dangerous Undetected failures	71.43
λ_{sd} = Total Safe Detected failures	0.00
λ_{su} = Total Safe Undetected failures	0.00
$\lambda_{tot\ safe}$ = Total Failure Rate (Safety Function) = $\lambda_{dd} + \lambda_{du} + \lambda_{sd} + \lambda_{su}$	**311.69**
MTBF (safety function, single channel) = (1 / $\lambda_{tot\ safe}$) + MTTR (8 hours)	**366 years**
$\lambda_{no\ effect}$ = "No Effect" failures	190.31
$\lambda_{not\ part}$ = "Not Part" failures	94.30
$\lambda_{tot\ device}$ = Total Failure Rate (Device) = $\lambda_{tot\ safe} + \lambda_{no\ effect} + \lambda_{not\ part}$	**596.30**
MTBF (device, single channel) = (1 / $\lambda_{tot\ device}$) + MTTR (8 hours)	**191 years**

Failure rates table according to IEC 61508:2010 Ed.2 :

λ_{sd}	λ_{su}	λ_{dd}	λ_{du}	SFF	DC_D
0.00 FIT	0.00 FIT	240.26 FIT	71.43 FIT	77.08%	77.08%

where DC means the diagnostic coverage (safe or dangerous) for the input sensor by the safety logic solver and internal diagnostic circuits. This type "B" system has SFF = 77.08 % ≥ 60 % and HFT = 0, which is sufficient to get SIL 2 in accordance with the requirements of IEC 61511-1 section 11.4.4 during a proven-in-use assessment.

PFDavg vs T[Proof] table (assuming Proof Test coverage of 99%), with determination of SIL supposing module contributes ≤10% of total SIF dangerous failures:

T[Proof] = 1 year	T[Proof] = 3 years	T[Proof] = 20 years
PFDavg = 3.15E-04 Valid for **SIL 2**	PFDavg = 9.46E-04 Valid for **SIL 2**	PFDavg = 6.31E-03 Valid for **SIL 1**

PFDavg vs T[Proof] table (assuming Proof Test coverage of 99%), with determination of SIL supposing module contributes >10% of total SIF dangerous failures:

T[Proof] = 10 years
PFDavg = 3.15E-03 Valid for **SIL 2**

Application for D5072D , with 4-20 mA Current Output

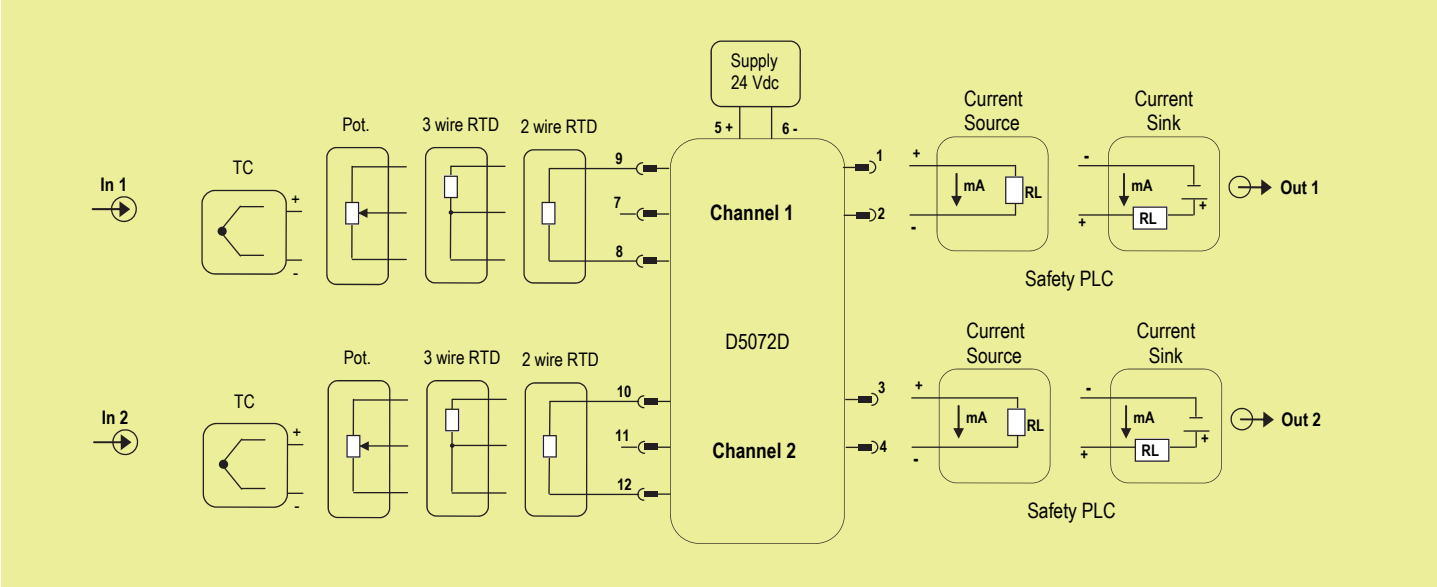

Description:

For this application, enable 4 - 20 mA Source or Sink mode for ch.1 and ch. 2 (see page 11 for more information).
The module is powered by connecting 24 Vdc power supply to Pins 5 (+ positive) and 6 (- negative). The green LED is lit in presence of supply power.
Input sensor (Thermocouple, RTD, Potentiometer) is applied from Pins 7 to 9 (for ch. 1) and from Pins 10 to 12 (for ch. 2). See page 11 for more information about input settings.
Source or Sink output current is applied to Pins 1-2 (for ch. 1) and to Pins 3 - 4 (for ch. 2).

Safety Function and Failure behavior:

D5072D is considered to be operating in Low Demand mode, as a Type B module, having Hardware Fault Tolerance (HFT) = 0.
The failure behaviour of D5072D module (only the 4 - 20 mA current output configuration is used for safety applications) is described from the following definitions :

- Fail-Safe State: is defined as the output going to Fail Low or Fail High, considering that the Safety logic solver can convert the Low and High failures (dangerous detected failures) to the Fail-Safe state.
- Fail Safe: failure mode that causes the module / (sub)system to go to the defined Fail-Safe state without a demand from the process .
- Fail Dangerous: failure mode that does not respond to a demand from the process (i.e. being unable to go to the defined Fail-Safe state) or deviates the output current by more than 3% of the correct value.
- Fail High: failure mode that causes the output signal to go above the maximum output current (> 20 mA). This limit value can be programmed by the user, but in this analysis it is set to 20 mA. Assuming that the application program in the Safety logic solver is configured to detect High failures and does not automatically trip on these failures, they have been classified as Dangerous Detected (DD) failures.
- Fail Low: failure mode that causes the output signal to go below the minimum output current (< 4 mA). This limit value can be programmed by the user, but in this analysis it is set to 4 mA. Assuming that the application program in the Safety logic solver is configured to detect Low failures and does not automatically trip on these failures, they have been classified as Dangerous Detected (DD) failures.
- Fail "No Effect": failure mode of a component that plays a part in implementing the Safety Function but that is neither a safe failure nor a dangerous failure. When calculating the SFF, this failure mode is not taken into account.
- Fail "Not part": failure mode of a component which is not part of the Safety Function but is part of the circuit diagram and is listed for completeness. When calculating the SFF this failure mode is not taken into account.

As the module is supposed to be proven-in-use device, therefore according to the requirements of IEC 61511-1 section 11.4.4, a HFT = 0 is sufficient for SIL 2 (sub-) systems including Type B components and having a SFF equal or more than 60%.
This analysis is also valid for D5072D as Duplicator or with optional remote CJC .
Failure rate data: taken from Siemens Standard SN29500.

Failure rate table:

Failure category	Failure rates (FIT)
λ_{dd} = Total Dangerous Detected failures	283.52
λ_{du} = Total Dangerous Undetected failures	71.43
λ_{sd} = Total Safe Detected failures	0.00
λ_{su} = Total Safe Undetected failures	0.00
$\lambda_{tot\ safe}$ = Total Failure Rate (Safety Function) = $\lambda_{dd} + \lambda_{du} + \lambda_{sd} + \lambda_{su}$	**354.95**
MTBF (safety function, one channel) = (1 / $\lambda_{tot\ safe}$) + MTTR (8 hours)	**321 years**
$\lambda_{no\ effect}$ = "No Effect" failures	279.05
$\lambda_{not\ part}$ = "Not Part" failures	191.20
$\lambda_{tot\ device}$ = Total Failure Rate (Device) = $\lambda_{tot\ safe} + \lambda_{no\ effect} + \lambda_{not\ part}$	**825.20**
MTBF (device) = (1 / $\lambda_{tot\ device}$) + MTTR (8 hours)	**138 years**

Failure rates table according to IEC 61508:2010 Ed.2 :

λ_{sd}	λ_{su}	λ_{dd}	λ_{du}	SFF	DC_D
0.00 FIT	0.00 FIT	283.52 FIT	71.43 FIT	79.88%	79.88%

where DC means the diagnostic coverage (safe or dangerous) for the input sensor by the safety logic solver and internal diagnostic circuits. This type "B" system has SFF = 79.88 % ≥ 60 % and HFT = 0, which is sufficient to get SIL 2 in accordance with the requirements of IEC 61511-1 section 11.4.4 during a proven-in-use assessment.

PFDavg vs T[Proof] table (assuming Proof Test coverage of 99%), with determination of SIL supposing module contributes ≤10% of total SIF dangerous failures:

T[Proof] = 1 year	T[Proof] = 3 years	T[Proof] = 20 years
PFDavg = 3.16E-04 Valid for **SIL 2**	PFDavg = 9.47E-04 Valid for **SIL 2**	PFDavg = 6.31E-03 Valid for **SIL 1**

PFDavg vs T[Proof] table (assuming Proof Test coverage of 99%), with determination of SIL supposing module contributes >10% of total SIF dangerous failures:

T[Proof] = 10 years
PFDavg = 3.16E-03 Valid for **SIL 2**

Testing procedure at T-proof

The proof test shall be performed to reveal dangerous faults which are undetected by diagnostic.
This means that it is necessary to specify how dangerous undetected faults, which have been noted during the FMEDA, can be revealed during the proof test.

Proof test 1 (to reveal 50 % of possible Dangerous Undetected failures)	
Steps	**Action**
1	Bypass the Safety PLC or take any other appropriate action to avoid a false trip.
2	Send a command to the temperature converter to go to the full scale current output and verify that the analog current reaches that value. This tests is for voltage compliance problems, such as low supply voltage or increased wiring resistance, and for other possible failures.
3	Send a command to the temperature converter to go to the low scale current output and verify that the analog current reaches that value. This tests is for possible quiescent current related failures.
4	Restore the loop to full operation.
5	Remove the bypass from the Safety-related PLC or restore normal operation.

Proof test 2 (to reveal 99 % of possible Dangerous Undetected failures)	
Steps	**Action**
1	Bypass the Safety PLC or take any other appropriate action to avoid a false trip.
2	Perform steps 2 and 3 of **Proof Test 1**.
3	Perform a two-point calibration of the temperature converter (i.e. 4 mA and 20 mA) and verify that the module output current is within the specified accuracy.
4	Restore the loop to full operation.
5	Remove the bypass from the Safety-related PLC or restore normal operation.

Warning

D5072 series are isolated Intrinsically Safe Associated Apparatus installed into standard EN50022 T35 DIN-Rail located in Safe Area or Zone 2, Group IIC, Temperature T4, Hazardous Area (according to EN/IEC60079-15) within the specified operating temperature limits Tamb –40 to +70 °C, and connected to equipment with a maximum limit for AC power supply Um of 250 Vrms.
Not to be connected to control equipment that uses or generates more than 250 Vrms or Vdc with respect to earth ground.
D5072 series must be installed, operated and maintained only by qualified personnel, in accordance to the relevant national/international installation standards (e.g. IEC/EN60079-14 Electrical apparatus for explosive gas atmospheres - Part 14: Electrical installations in hazardous areas (other than mines)), following the established installation rules, particular care shall be given to segregation and clear identification of I.S. conductors from non I.S. ones.
De-energize power source (turn off power supply voltage) before plug or unplug the terminal blocks when installed in Hazardous Area or unless area is known to be nonhazardous.
Warning: substitution of components may impair Intrinsic Safety and suitability for Zone 2.
Explosion Hazard: to prevent ignition of flammable or combustible atmospheres, disconnect power before servicing or unless area is known to be nonhazardous.
Failure to properly installation or use of the equipment may risk to damage the unit or severe personal injury.
The unit cannot be repaired by the end user and must be returned to the manufacturer or his authorized representative.
Any unauthorized modification must be avoided.

Operation

Each input channel of Temperature Signal Converter D5072 accepts a low level dc signal from millivolt, thermocouple or 2-3-4 wire RTD temperature or transmitting potentiometer sensor, located in Hazardous Area, and converts, with isolation, the signal to a 4-20 mA floating output current to drive a Safe Area load.
Presence of supply power is displayed by a “POWER ON” green signaling LED; integrity of field sensor and connecting line can be monitored by a configurable burnout circuit which, if enabled, can drive output signal to upscale or downscale limit. Burnout condition is signaled by red front panel LED for each channel.
D5072D module has double input and output channel, and can also be programmed to interface a single input and obtain dual output channel (duplicator) or configurable output channel (outputs can repeat the corresponding inputs or be proportional to the sum or difference of the two input process variables or with low/high selector function).

Installation

D5072 series are temperature signal converters housed in a plastic enclosure suitable for installation on T35 DIN-Rail according to EN50022, with or without Power Bus or on customized Termination Board.
D5072 unit can be mounted with any orientation over the entire ambient temperature range.
Electrical connection of conductors up to 2.5 mm² are accommodated by polarized plug-in removable screw terminal blocks which can be plugged in/out into a powered unit without suffering or causing any damage **(for Zone 2 installations check the area to be nonhazardous before servicing)**.
The wiring cables have to be proportionate in base to the current and the length of the cable.
On the section “Function Diagram” and enclosure side a block diagram identifies all connections.
Identify the number of channels of the specific card (e.g. D5072S is a single channel model and D5072D is a dual channel model), the function and location of each connection terminal using the wiring diagram on the corresponding section, as an example (for each channel: thermocouple input, source current output):
Connect 24 Vdc power supply positive at terminal “5” and negative at terminal “6”.
For model D5072S connect positive output of channel 1 at terminal “1” and negative output at “2”.
For model D5072D in addition to channel 1 connections above, connect positive output of channel 2 at terminal “3” and negative output at “4”.
For channel 1, connect thermocouple positive extension wire at terminal “7”, negative and shield (if any) at terminal “8”.
For channel 2, connect thermocouple positive extension wire at terminal “11”, negative and shield (if any) at terminal “12”.
Make sure that compensating wires have the correct metal and thermal e.m.f. and are connected to the appropriate thermocouple terminal, note that a wrong compensating cable type or a swapped connection is not immediately apparent but introduces a misleading measurement error that appears as a temperature drift.

Intrinsically Safe conductors must be identified and segregated from non I.S. and wired in accordance to the relevant national/international installation standards (e.g. EN/IEC60079-14 Electrical apparatus for explosive gas atmospheres - Part 14: Electrical installations in hazardous areas (other than mines)), make sure that conductors are well isolated from each other and do not produce any unintentional connection.
The enclosure provides, according to EN60529, an IP20 minimum degree of mechanical protection (or similar to NEMA Standard 250 type 1) for indoor installation, outdoor installation requires an additional enclosure with higher degree of protection (i.e. IP54 to IP65 or NEMA type 12-13) consistent with the effective operating environment of the specific installation.
Units must be protected against dirt, dust, extreme mechanical (e.g. vibration, impact and shock) and thermal stress, and casual contacts.
If enclosure needs to be cleaned use only a cloth lightly moistened by a mixture of detergent in water.
Electrostatic Hazard: to avoid electrostatic hazard, the enclosure of D5072 must be cleaned only with a damp or antistatic cloth.
Any penetration of cleaning liquid must be avoided to prevent damage to the unit. Any unauthorized card modification must be avoided.
According to EN61010, D5072 series must be connected to SELV or SELV-E supplies.

Start-up

Before powering the unit check that all wires are properly connected, particularly supply conductors and their polarity, input and output wires, also check that Intrinsically Safe conductors and cable trays are segregated (no direct contacts with other non I.S. conductors) and identified either by color coding, preferably blue, or by marking.
Check conductors for exposed wires that could touch each other causing dangerous unwanted shorts.
Turn on power, the “power on” green leds must be lit, output on each channel must be in accordance with the corresponding input signal value and input/output chosen transfer function.
If possible change the sensor condition and check the corresponding Safe Area output.

Input specifications:

Input	Type	Alpha	Ohms	Standards	Min Span	Accuracy	Accuracy Range	Maximum Range
RTD	Platinum	0.003850	50	IEC 60751	20 °C (36 °F)	±0.4 °C ±0.7 °F	-200 to 850 °C (-328 to 1562 °F)	-200 to 850 °C (-328 to 1562 °F)
			100	IEC 60751	20 °C (36 °F)	±0.2 °C ±0.4 °F	-200 to 850 °C (-328 to 1562 °F)	-200 to 850 °C (-328 to 1562 °F)
			200	IEC 60751		±0.2 °C ±0.4 °F	-200 to 850 °C (-328 to 1562 °F)	-200 to 850 °C (-328 to 1562 °F)
			300	IEC 60751		±0.2 °C ±0.4 °F	-200 to 850 °C (-328 to 1562 °F)	-200 to 850 °C (-328 to 1562 °F)
			400	IEC 60751		±0.2 °C ±0.4 °F	-200 to 850 °C (-328 to 1562 °F)	-200 to 850 °C (-328 to 1562 °F)
			500	IEC 60751		±0.2 °C ±0.4 °F	-200 to 850 °C (-328 to 1562 °F)	-200 to 850 °C (-328 to 1562 °F)
			1000	IEC 60751		±0.2 °C ±0.4 °F	-200 to 850 °C (-328 to 1562 °F)	-200 to 850 °C (-328 to 1562 °F)
		0.003916	100	ANSI	20 °C (36 °F)	±0.2 °C ±0.4 °F	-200 to 625 °C (-328 to 1157 °F)	-200 to 625 °C (-328 to 1157 °F)
		0.003910	46	GOST 6651	20 °C (36 °F)	±0.4 °C ±0.7 °F	-200 to 650 °C (-328 to 1202 °F)	-200 to 650 °C (-328 to 1202 °F)
			50	GOST 6651		±0.4 °C ±0.7 °F	-200 to 650 °C (-328 to 1202 °F)	-200 to 650 °C (-328 to 1202 °F)
			100	GOST 6651	20 °C (36 °F)	±0.2 °C ±0.4 °F	-200 to 650 °C (-328 to 1202 °F)	-200 to 650 °C (-328 to 1202 °F)
			200	GOST 6651		±0.2 °C ±0.4 °F	-200 to 650 °C (-328 to 1202 °F)	-200 to 650 °C (-328 to 1202 °F)
			300	GOST 6651		±0.2 °C ±0.4 °F	-200 to 650 °C (-328 to 1202 °F)	-200 to 650 °C (-328 to 1202 °F)
			400	GOST 6651		±0.2 °C ±0.4 °F	-200 to 650 °C (-328 to 1202 °F)	-200 to 650 °C (-328 to 1202 °F)
			500	GOST 6651		±0.2 °C ±0.4 °F	-200 to 650 °C (-328 to 1202 °F)	-200 to 650 °C (-328 to 1202 °F)
	Nickel	0.00618	100	DIN 43760	20 °C (36 °F)	±0.2 °C ±0.4 °F	-60 to 180 °C (-76 to 356 °F)	-60 to 180 °C (-76 to 356 °F)
		0.00672	120	DIN 43760		±0.2 °C ±0.4 °F	-80 to 320 °C (-112 to 608 °F)	-80 to 320 °C (-112 to 608 °F)
	Copper	0.00428	50	GOST 6651	20 °C (36 °F)	±0.4 °C ±0.7 °F	-50 to 200 °C (-58 to 392 °F)	-50 to 200 °C (-58 to 392 °F)
			53	GOST 6651	20 °C (36 °F)	±0.4 °C ±0.7 °F	-50 to 200 °C (-58 to 392 °F)	-50 to 200 °C (-58 to 392 °F)
			100	GOST 6651	20 °C (36 °F)	±0.2 °C ±0.4 °F	-50 to 200 °C (-58 to 392 °F)	-50 to 200 °C (-58 to 392 °F)
		0.00427	9.035	---	20 °C (36 °F)	±1.0 °C ±1.8 °F	-50 to 260 °C (-58 to 500 °F)	-50 to 260 °C (-58 to 500 °F)
Ohm	Resistance		0 to 4000	---	1 ohm	±0.4 ohm	0 to 4000	0 to 4000
	Potentiometer		100 to 10000	---	1 %	±0.1%	0 to 100%	0 to 100%
TC	A1		---	GOST 8.585-2001	20 °C (36 °F)	±0.75 °C ±1.35 °F	25 to 2500 °C (77 to 4532 °F)	-10 to 2500 °C (14 to 4532 °F)
	A2		---	GOST 8.585-2001	20 °C (36 °F)	±0.75 °C ±1.35 °F	25 to 1800 °C (77 to 3272 °F)	-10 to 1800 °C (14 to 3272 °F)
	A3		---	GOST 8.585-2001	20 °C (36 °F)	±0.75 °C ±1.35 °F	25 to 1800 °C (77 to 3272 °F)	-10 to 1800 °C (14 to 3272 °F)
	B		---	IEC 60584 GOST 8.585-2001	100 °C (180 °F)	±0.75 °C ±1.35 °F	180 to 1800 °C (356 to 3272 °F)	-10 to 1800 °C (14 to 3272 °F)
	E		---	IEC 60584 GOST 8.585-2001	20 °C (36 °F)	±0.3 °C ±0.6 °F	-100 to 1000 °C (-148 to 1832 °F)	-250 to 1000 °C (-418 to 1832 °F)
	J		---	IEC 60584 GOST 8.585-2001	20 °C (36 °F)	±0.3 °C ±0.6 °F	-125 to 750 °C (-193 to 1382 °F)	-200 to 1200 °C (-328 to 2192 °F)
	K		---	IEC 60584 GOST 8.585-2001	20 °C (36 °F)	±0.3 °C ±0.6 °F	-125 to 1350 °C (-193 to 2462 °F)	-250 to 1350 °C (-418 to 2462 °F)
	L		---	DIN 43710	20 °C (36 °F)	±0.3 °C ±0.6 °F	-100 to 800 °C (-148 to 1472 °F)	-200 to 800 °C (-328 to 1472 °F)
	LR		---	GOST 8.585-2001	20 °C (36 °F)	±0.3 °C ±0.6 °F	-75 to 800 °C (-103 to 1472 °F)	-200 to 800 °C (-328 to 1472 °F)
	N		---	IEC 60584 GOST 8.585-2001	20 °C (36 °F)	±0.3 °C ±0.6 °F	-100 to 1300 °C (-148 to 2372 °F)	-250 to 1300 °C (-418 to 2372 °F)
	R		---	IEC 60584 GOST 8.585-2001	20 °C (36 °F)	±0.5 °C ±0.9 °F	75 to 1750 °C (167 to 3182 °F)	-50 to 1750 °C (-58 to 3182 °F)
	S		---	IEC 60584 GOST 8.585-2001	20 °C (36 °F)	±0.5 °C ±0.9 °F	75 to 1750 °C (167 to 3182 °F)	-50 to 1750 °C (-58 to 3182 °F)
	T		---	IEC 60584 GOST 8.585-2001	20 °C (36 °F)	±0.3 °C ±0.6 °F	-100 to 400 °C (-148 to 752 °F)	-250 to 400 °C (-418 to 752 °F)
	U		---	DIN 43710	20 °C (36 °F)	±0.3 °C ±0.6 °F	-100 to 400 °C (-148 to 752 °F)	-200 to 600 °C (-328 to 1112 °F)
mV	DC		---	---	1 mV	±10 µV	-50 to 80 mV	-50 to 80 mV

Notes:

RTD/resistance accuracy shown in 4-wires configuration, in slow acquisition mode

TC/mV Accuracy shown in slow acquisition mode

Configuration parameters:

INPUT:

Sensor Connection:
- ☐ TC
- ☐ RTD
- ☐ Potentiometer
- ☐ Voltage
- ☐ Resistance

Sensor Type: input sensor type (see list in section "Input specifications")
possibility of configuring a completely customized TC/RTD input curve

Wires: 2, 3, 4 wires selection for RTD/Resistance inputs

Lowscale: input value of measuring range corresponding to defined low output value.

Upscale: input value of measuring range corresponding to defined high output value.

Cold Junction Source: reference junction compensation type (thermocouple only)
- ☐ Automatic — via internal compensator (1 for each channel)
- ☐ Fixed — programmable temperature compensation at fixed temperature
- ☐ Other Input — remote compensation using RTD on remaining channel

Cold Junction Reference: fixed temperature compensation value (Cold Junction type Fixed only), range from –60 to +100 °C.

Integration speed:
- ☐ Slow — 250 ms (mV/TC,2 wire RTD); 375 ms (Pot.), 500 ms (3,4 wire RTD)
- ☐ Fast — 50 ms (mV/TC,2 wire RTD); 75 ms (Pot.), 100 ms (3,4 wire RTD)

Mains Frequency:
- ☐ 50 Hz
- ☐ 60 Hz — only available with fast integration speed

Offset: value to be added/subtracted to input (µV or mΩ depending on input sensor);

Multiplier: input multiplication value;

Tag: 16 alphanumerical characters

OUTPUT:

Function:
- ☐ Input 1 — analog output represents input of first channel,
- ☐ Input 2 — analog output represents input of second channel,
- ☐ Input 1 + 2 — analog output represents the sum of the two input channels,
- ☐ Input 1 - 2 — analog output represents the subtraction of the two input ch.,
- ☐ Min(Input 1, Input 2) — analog output represents the lower of the two input ch.,
- ☐ Max(Input 1, Input 2) — analog output represents the higher of the two input ch.

Type:
- ☐ 4-20 mA Sink — (for SIL applications)
- ☐ 0-20 mA Sink
- ☐ Custom Sink — fully customizable range from 0 to 24 mA, Sink mode
- ☐ 4-20 mA Source — (for SIL applications)
- ☐ 0-20 mA Source
- ☐ Custom Source — fully customizable range from 0 to 24 mA, Source mode

Downscale: output downscale in normal condition (range 0 to 24 mA)

Upscale: output upscale in normal condition (range 0 to 24 mA)

Under Range: analog output downscale in Under Range condition (range 0 to 24 mA)

Over Range: analog output upscale in Over Range condition (range 0 to 24 mA)

Fault Output Value: analog output value in case of fault condition (range 0 to 24 mA)

Fault in case of: analog output is forced to "Fault Output Value" in case of:
- ☐ Burnout — input sensor interruption,
- ☐ Internal fault — module internal fault,
- ☐ Sensor out of range — input sensor out of configured input range,
- ☐ Output Saturation — output is below Under Range or above Over Range,
- ☐ Module Temp. Out of range — internal module temperature under or over specified module operating temperature limits.

ALARM:

Type:
- ☐ None — alarm is disabled,
- ☐ Low — alarm is triggered when source descends below "Low Set",
- ☐ LowLock — alarm is inhibited until source ascends over "Low Set", and then, it behaves as a standard "Low" configuration,
- ☐ High — alarm is triggered when source ascends over "High Set",
- ☐ HighLock — alarm is inhibited until source descends below "High Set", and then, it behaves as a standard "High" configuration,
- ☐ Window — alarm is triggered below "Low Set" and above "High Set",
- ☐ Fault Repeater — alarm output reflects selected (one or more) Fault status.

Source: reference value for alarm triggering
- ☐ Input 1 — input of first channel,
- ☐ Input 2 — input of second channel,
- ☐ Input 1 + 2 — sum of the two input channels,
- ☐ Input 1 - 2 — subtraction of the two input channels,
- ☐ Min(Input 1, Input 2) — lower of the two input channels,
- ☐ Max(Input 1, Input 2) — higher of the two input channels.

Condition:
- ☐ NE — alarm output is normally energized when deactivated,
- ☐ ND — alarm output is normally de-energized when deactivated.

Low Set: source value at which the alarm is triggered (in Low, LowLock, Window)

Low Hysteresys: triggered Low alarm deactivates when source value reaches Low Set + Low Hysteresys (0-500 °C, 0-50 mV, 0-50 %, 0 to 2 KΩ)

High Set: source value at which the alarm is triggered (in High, HighLock, Window)

High Hysteresys: triggered High alarm deactivates when source value reaches High Set - High Hysteresys (0-500 °C, 0-50 mV, 0-50 %, 0 to 2 KΩ)

On Delay: time for which the source variable has to be in alarm condition before the alarm output is triggered; configurable from 0 to 1000 seconds in steps of 100 ms

Off Delay: time for which the source variable has to be in normal condition before the alarm output is deactivated; configurable from 0 to 1000 seconds in steps of 100 ms

In case of fault:
- ☐ Ignore — alarm is not affected
- ☐ Lock status — alarm remains in the same status as it was before Fault occurred
- ☐ Go On — alarm is triggered,
- ☐ Go Off — alarm is deactivated

Faults: if "Type" is set to "Fault repeater" select which faults will be repeated by alarm output; if "In case of fault" is different from "Ignore", select which faults should influence alarm output behaviour.

Note: Each channel has completely independent configurations
See ISM0154 Manual for details on SWC5090 software.

Screenshots:

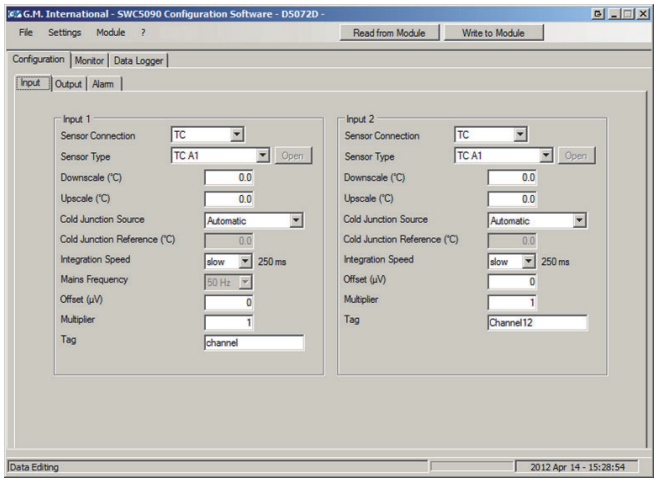

Input configuration

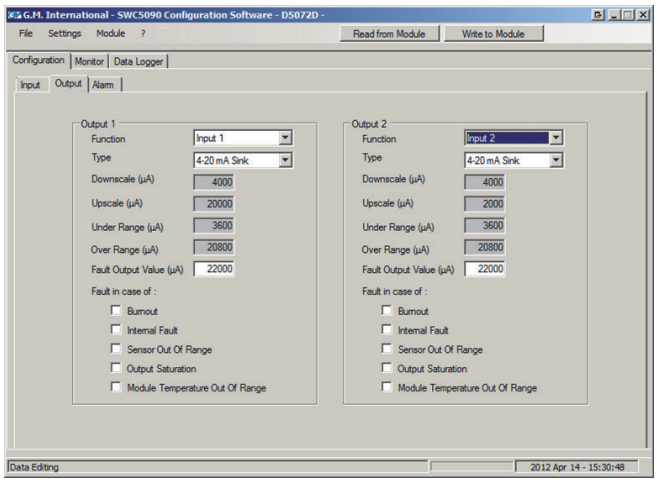

Output configuration

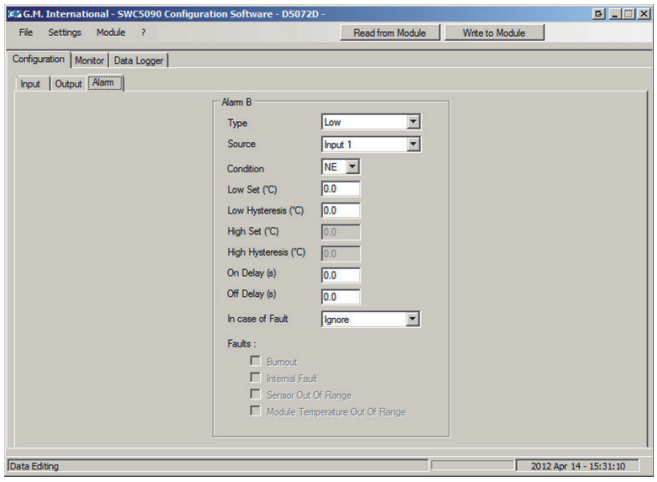

Alarm configuration

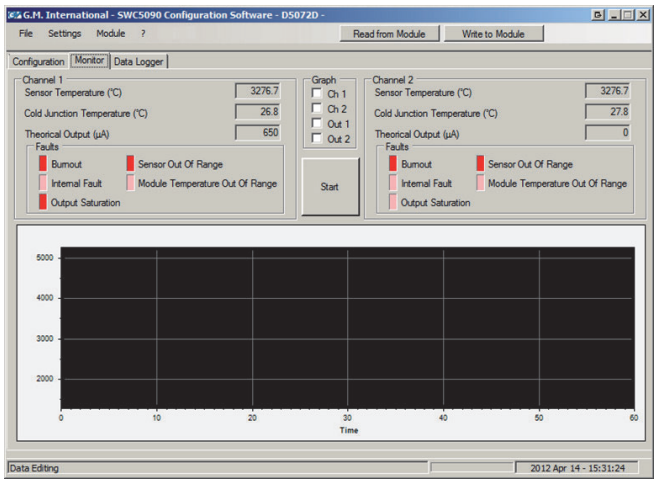

Monitor

Supported Modbus parameters:

The unit can communicate via Modbus RTU RS-485 protocol. Below is a list of all available registers.

Addr.	Description	Notes	Type(10)
0	G.M. Factory Code	Identification Data	R
1	Instrument Code		
2	Option Code		
3	Hardware Release		
4	Software Release		
16	Modbus Address	Communication Data	R/W
17	Modbus Baudrate (1)		
18	Modbus Format (1)		
71	Ch. 1 Measured Value (Low 16 bits)(5)	Input Data	R
72	Ch. 1 Measured Value (High 16 bits)(5)		
73	Ch. 1 Cold Junction value (2)		
74	Ch. 1 Input temperature (3) (8)		
75	Ch. 1 Fault status (1)		
76	Ch. 2 Measured Value (Low 16 bits) (5)		
77	Ch. 2 Measured Value (High 16 bits)(5)		
78	Ch. 2 Cold Junction value (2)		
79	Ch. 2 Input temperature (3) (8)		
80	Ch. 2 Fault status (1)		
116	Ch. 1 Input Configuration (1)	Input Configuration	R/W
117	Ch. 1 Sensor Type (1)		
118	Ch. 1 Fixed Cold junction temp. value (8)		
119	Ch. 1 Offset (Low 16 bits) (5)		
120	Ch. 1 Offset (High 16 bits) (5)		
121	Ch. 1 Multiplier		
122	Ch. 1 Divider		
123	Ch. 1 Downscale (Low 16 bits) (6)		
124	Ch. 1 Downscale (High 16 bits) (6)		
125	Ch. 1 Highscale (Low 16 bits) (6)		
126	Ch. 1 Highscale (High 16 bits) (6)		
127	Ch. 2 Input Configuration (1)		
128	Ch. 2 Sensor Type (1)		
129	Ch. 2 Fixed Cold junction temp. value (8)		
130	Ch. 2 Offset (Low 16 bits) (5)		
131	Ch. 2 Offset (High 16 bits) (5)		
132	Ch. 2 Multiplier		
133	Ch. 2 Divider		
134	Ch. 2 Downscale (Low 16 bits) (6)		
135	Ch. 2 Downscale (High 16 bits) (6)		
136	Ch. 2 Highscale (Low 16 bits) (6)		
137	Ch. 2 Highscale (High 16 bits) (6)		
138	Cold Junction source selection (1)		
160	Ch. 1 Output configuration (1)	Output Configuration	R/W
161	Ch. 1 Downscale (7)		
162	Ch. 1 Under Range (7)		
163	Ch. 1 Upscale (7)		
164	Ch. 1 Over Range (7)		
166	Ch. 1 Fault current (7)		
167	Ch. 2 Output configuration (1)		
168	Ch. 2 Downscale (7)		
169	Ch. 2 Under Range (7)		
170	Ch. 2 Upscale (7)		
171	Ch. 2 Over Range (7)		
173	Ch. 2 Fault current (7)		
253	Alarm B Configuration (1)	Alarm Control	R/W
254	Alarm B Fault Configuration (1)		
255	Alarm B Source (1)		
256	Alarm B Low Threshold (Low 16 bits) (6)		
257	Alarm B Low Threshold (High 16 bits) (6)		
258	Alarm B Low Hysteresis (Low 16 bits) (6)		
259	Alarm B Low Hysteresis (High 16 bits)(6)		
260	Alarm B High Threshold (Low 16 bits) (6)		
261	Alarm B High Threshold (High 16 bits)(6)		
262	Alarm B High Hysteresis (Low 16 bits)(6)		
263	Alarm B High Hysteresis (High 16 bits)(6)		
264	Alarm B Delay ON (9)		
265	Alarm B Delay OFF (9)		

Addr.	Description	Notes	Type(10)
464	Command execution (4)	Command	W
524	Ch. 1 Output Current Saturation Fault	Output data	R
525	Ch. 1 Theorical Output Current (7)		
526	Ch. 2 Output Current Saturation Fault		
527	Ch. 2 Theorical Output Current (7)		
533	Alarm B Status	Alarm data	R
556	Ch. 1 chars 0, 1	Tags	R/W
557	Ch. 1 chars 2, 3		
558	Ch. 1 chars 4, 5		
559	Ch. 1 chars 6, 7		
560	Ch. 1 chars 8, 9		
561	Ch. 1 chars 10, 11		
562	Ch. 1 chars 12, 13		
563	Ch. 1 chars 14, 15		
564	Ch. 2 chars 0, 1		
565	Ch. 2 chars 2, 3		
566	Ch. 2 chars 4, 5		
567	Ch. 2 chars 6, 7		
568	Ch. 2 chars 8, 9		
569	Ch. 2 chars 10, 11		
570	Ch. 2 chars 12, 13		
571	Ch. 2 chars 14, 15		

Supported modbus functions:

Code	Name	Notes
03	read holding registers	reads a stream of words from memory
04	read input registers	reads a stream of words from memory
08	diagnostics: subcode 0	returns query data
06	write single register	writes a word in memory
16	write multiple registers	writes a stream of words in memory

Notes:

Each Modbus parameter is described by one 16-bit word.
Commands related to Channel 2 are valid only for model D5072D

(1) See command details on next page.
(2) Returned value must be divided by 16 to obtain Temperature in ° Celsius.
(3) Value is valid only when Input source is Tc or RTD.
(4) All configurations must be confirmed via Addr. 464, see details on next page.
(5) Expressed in:
μV when Input Connection is Tc or Voltage;
mΩ when Input Connection is RTD or Resistance;
ppm when Input Connection is Potentiometer.
(6) Expressed in:
μV when Input Connection is Voltage;
Tenths of °C when Input Connection is Tc or RTD;
mΩ when Input Connection is Resistance;
ppm when Input Connection is Potentiometer.
(7) Expressed in μA.
(8) Expressed in Tenths of ° Celsius.
(9) Expressed in Tenths of seconds.
(10) Parameter Type:
R = read only,
W = write only,
R/W = read and write.

Modbus parameters details:

Address 17: Supported Modbus Baudrates

Index	Baudrate
0	4800
1	9600
2	19200
3	38400
4	57600
5	115200

Address 18: Supported Modbus Formats

High Byte								Low Byte							
Bit position															
15	14	13	12	11	10	9	8	7	6	5	4	3	2	1	0

Endianness 32 bit Data (0 = Little; 1 = Big)

Termination resistance (1 = enabled)

Supported Modbus Parity:
- 0 8 data bit, no parity, 1 stop bit
- 1 8 data bit, even parity, 1 stop bit
- 2 8 data bit, odd parity, 1 stop bit

Address 75 and 80: Input Fault status

High Byte								Low Byte							
Bit position															
15	14	13	12	11	10	9	8	7	6	5	4	3	2	1	0

Module temperature out of range

Internal communication fault

Input sensor out of range

Input sensor Burnout

Internal cold junction sensor fault

Address 116 and 127: Input Configuration

High Byte								Low Byte							
Bit position															
15	14	13	12	11	10	9	8	7	6	5	4	3	2	1	0

Mains supply freq. (0 = 50 Hz; 1 = 60 Hz)

Integration speed (0 = Slow; 1 = Fast)

Sensor connection:
- 0 Tc / Voltage (only SW revision 0)
- 1 RTD / Resistance 2-wires
- 2 RTD / Resistance 3-Wires
- 3 RTD / Resistance 4-Wires
- 4 Potentiometer
- 5 Tc / Voltage (only SW revision ≥ 1)

Address 117 and 128: Input Sensor Type

High Byte								Low Byte							
Bit position															
15	14	13	12	11	10	9	8	7	6	5	4	3	2	1	0

Available sensor types (see also page 8):

0 Tc A1	10 Tc R	20 Pt 1000 (IEC)	30 Ni 120 (DIN)
1 Tc A2	11 Tc S	21 Pt 100 (ANSI)	31 Cu 53 (GOST)
2 Tc A3	12 Tc T	22 Pt 46 (GOST)	32 Cu 50 (GOST)
3 Tc B	13 Tc U	23 Pt 50 (GOST)	33 Cu 100 (GOST)
4 Tc E	14 Pt 50 (IEC)	24 Pt 100 (GOST)	34 Cu 9.035
5 Tc J	15 Pt 100 (IEC)	25 Pt 200 (GOST)	35 Voltage
6 Tc K	16 Pt 200 (IEC)	26 Pt 300 (GOST)	36 Resistance
7 Tc L	17 Pt 300 (IEC)	27 Pt 400 (GOST)	37 Custom device
8 Tc Lr	18 Pt 400 (IEC)	28 Pt 500 (GOST)	38 Potentiometer
9 Tc N	19 Pt 500 (IEC)	29 Ni 100 (DIN)	

Address 242 and 255: Alarm Source

High Byte								Low Byte							
Bit position															
15	14	13	12	11	10	9	8	7	6	5	4	3	2	1	0

Alarm source:
- 0 Input 1
- 1 Input 2
- 2 In 1 + In 2
- 3 In 1 - In 2
- 4 Min (In 1, In 2)
- 5 Max (In 1, In 2)

Address 138: Cold Junction Source selection

High Byte								Low Byte							
Bit position															
15	14	13	12	11	10	9	8	7	6	5	4	3	2	1	0

All bits '0' for Automatic Internal CJC (SW rev.= 0)

Ch. 2 Automatic Internal CJC (SW rev. ≥ 1)

Ch. 1 Automatic Internal CJC (SW rev. ≥ 1)

Ch. 2 Cold Junction from RTD on Ch. 1

Ch. 1 Cold Junction from RTD on Ch. 2

Ch. 2 Fixed Cold Junction

Ch. 1 Fixed Cold Junction

Address 160 and 167: Output Configuration

High Byte								Low Byte							
Bit position															
15	14	13	12	11	10	9	8	7	6	5	4	3	2	1	0

Internal CJC Fault

Burnout

Output Saturation

Sensor out of range

Internal comm. fault

Out of temp. range

Output Source:
- 0 Input 1
- 1 Input 2
- 2 In 1 + In 2
- 3 In 1 - In 2
- 4 Min (In 1, In 2)
- 5 Max (In 1, In 2)

Out type:
- 0 Sink
- 1 Source

Address 253: Alarm Configuration

High Byte								Low Byte							
Bit position															
15	14	13	12	11	10	9	8	7	6	5	4	3	2	1	0

Alarm Condition:
- 0 NE
- 1 ND

Alarm Type:
- 0 None
- 1 Low
- 2 Low Lock
- 3 High
- 4 High Lock
- 5 Window
- 6 Flt repeat

Address 254: Alarm Fault Configuration

High Byte								Low Byte							
Bit position															
15	14	13	12	11	10	9	8	7	6	5	4	3	2	1	0

Out of temperature

Internal comm. fault

Sensor out of range

Burnout

Internal CJC fault

Configuration:
- 0 Ignore
- 1 Flt Lock
- 2 To ON
- 3 To OFF

Address 464: Various commands

High Byte								Low Byte							
Bit position															
15	14	13	12	11	10	9	8	7	6	5	4	3	2	1	0

- 1 Save Input/Output Configuration
- 2 Save Modbus configuration
- 8 Save Tags
- 9 Lock Alarms
- 10 Analog Output Sink/Source Switch